Instruction handbook

Language	**English**
	Translation
Document No.	5.16019.03
Part No.	463034
Status	23-May-2022

be in motion be in motion

BAUMÜLLER

b maXX

BM5-CAP

DC link capacitance unit

E	5.16019.03

Read the Instruction handbook before starting any work!

Preliminary information

Warning Insofar as this document is identified as being preliminary information, the following applies:
this version is regarded as providing advance technical information to users of the described devices and their functions at an early enough time in order to adapt to any possible changes or expanded functionality.
This information must be regarded as being preliminary, as it has not yet passed through Baumüller's internal review process. In particular, this information is still subject to changes, thus no legal liability can be derived from this preliminary information. Baumüller assumes no liability for damages that might arise from this possibly faulty or incomplete version.
If you detect or suspect any content errors and/or major form errors in this preliminary information, we request that you notify the Baumüller support specialist responsible for you. Please provide us, via this employee, with your insights and comments so that we can take them into account and include them when transitioning from the preliminary information to the final information (as reviewed by Baumüller).
The conditions stipulated in the following section under „Obligatory“ are invalid in case of preliminary information.

Obligatory

This Instruction handbook are a part of the equipment/machine. This Instruction handbook must be available to the operator at all times and must be in legible condition. If the equipment/machine is sold or moved another location, these Instruction handbook must be passed on by the owner together with the equipment/machine.
After any sale of the equipment/machine, this original and all copies must be handed over to the buyer. After disposal or any other end use, this original and all copies must be destroyed.

When the present Instruction handbook are handed over, corresponding sets of instruction handbooks of a previous version are automatically invalidated.
Please note that the specifications/data/information **are current values according to the printing date**. These statements are **not legally binding** with regard to measurements, computation or calculations.
Baumüller Nürnberg GmbH reserves the right, in developing its products further, to change the technical specifications and handling of it products concerned without prior notice.

No liability can be accepted concerning the correctness of these Instruction handbook unless otherwise specified in the General Conditions of Sale and Delivery.

Ostendstr. 80 - 90
90482 Nuremberg
Germany

Tel. +49 9 11 54 32 - 0
Fax: +49 9 11 54 32 - 1 30

Email : mail@baumueller.de
Internet: www.baumueller.de

Table of Contents

1

GENERAL

1.1 Information on the instruction handbook

These instruction handbook provides important information on handling the device. A prerequisite for safe work is compliance with all specified safety notes and procedural instructions.

Additionally, the valid accident prevention regulations and general safety regulations applicable to the scope of application the device must be complied with.

Read the instruction handbook, particularly the safety notes chapter, completely before beginning any work on the device. The instruction handbook is part of the product and must be kept accessible to personnel at all times in the immediate vicinity of the device.

1.2 Key to symbols

Warning notes

Warning notes are identified by symbols in these instruction handbook. The notes are introduced by signal words that express the extent of the danger.

It is imperative that these notes be complied with and are conscientiously regarded in order to prevent accidents, personal injury and material damage.

DANGER!

....points out an immediately dangerous situation that will lead to severe injuries or death if not avoided.

WARNING!

....points out a potentially dangerous situation that could lead to severe injuries or death if not avoided.

	**CAUTION!** ....points out a potentially dangerous situation that could lead to minor or slight injuries if not avoided.

	**NOTICE!** ....points out a potentially dangerous situation that could lead to material damage if not avoided.

Recommendations

	**NOTE!** ....highlights useful tips and recommendations, as well as information for efficient and problem-free use.

1.3 Limitation of liability

All specifications and notes in these instruction handbook were compiled taking into account the applicable standards and regulations, the state of the art and our knowledge and experience of many years.

The manufacturer assumes no liability for damages due to:

- non-compliance with the instruction handbook
- usage for other than the intended purpose
- usage by untrained personnel

The actual scope of delivery can vary in case of optional equipment, laying claim to additional order options, or on account of the latest technical changes to the explanations and representations described herein.

The user bears the responsibility for performing service and initial operation in accordance with the safety regulations of the applicable standards and all other relevant governmental or local regulations concerning the dimensioning and protection of conductors, grounding, disconnectors, overcurrent protection, etc.

The person who carried out the mounting or installation is liable for any damage incurred when assembling or connecting the device.

1.4 Copyright protection

The instruction handbook must be treated confidentially. It is to be used exclusively by personnel who work with the device. The consignment of the instruction handbook to third persons without the written permission of the manufacturer is prohibited.

NOTE!

The specific contents, text, drawings, images and other representations are copyrighted and subject to industrial property rights. Any prohibited usage is punishable by law.

NOTE!

Please note, that BAUMÜLLER is not responsible to examine whether any (industrial property) rights of third parties are infringed by the application-specific use of the BAUMÜLLER products/components or the execution.

1.5 Other applicable documents

Components of other manufacturers are integrated into the device. For these purchased parts, hazard assessments have been performed by the respective manufacturers. The compliance of the design construction with the applicable European and national regulations has been declared for the components by the respective manufacturers.

1.6 Spare parts

WARNING!

False or flawed spare parts can lead to damage, malfunction or complete failure, thus endangering safety.

Therefore:

- Only use original spare parts of the manufacturer.

Procure spare parts through an authorized dealer or directly from the manufacturer.

See also ▹Accessories and spare parts◃ as from page 49.

1.7 Disposal

Insofar as no take-back or disposal agreement has been made, please disassemble units correctly and properly recycle the constituent parts.

See also ▹Disposal◃ on page 55.

1.8 Guarantee provisions

The guarantee provisions are stated in a separate document of the sales documents.

The devices described herein may only be operated in accordance with the stipulated methods, procedures and conditions. Anything else not presented here, including the operation of devices in mounted positions, is not permitted and must be cleared with the plant on a case-by-case basis. If the devices are operated in any other manner than as described within these instruction handbook, then all guarantee and warranty rights are rendered null and void.

1.9 Customer service

Our customer service is available to provide you with technical information.

Info on the responsible contact persons is available at all times via telephone, fax, mail or the Internet.

1.10 Terms used

The term „device“ or the item designation „DC link capacitance unit „are also used in this documentation for the Baumüller product „**b maXX BM5-CAP**“.

2

SAFETY

This section provides an overview of all of the important safety aspects for optimum protection of personnel as well as for the safe and problem-free operation.

2.1 Contents of the Instruction handbook

Each person who is tasked with performing work on or with the device must have read and understood the instruction handbook before working with the device. This also applies if the person involved with this kind of device or a similar one, or has been trained by the manufacturer.

2.2 Changes and modifications to the device

In order to prevent hazards and to ensure optimum performance, no changes, additions or modifications may be undertaken on the device that have not been explicitly approved by the manufacturer.

2.3 Usage for the intended purpose

The device is conceived and constructed exclusively for usage compliant with its intended purpose described in these instruction handbook.

The devices of the model series **BM5-CAP** are DC link capacitance units.

A device is considered as being used compliant with its intended purpose if all notes and information of these instruction handbook are adhered to.

WARNING!

Danger arising from usage for an unintended purpose!

Any usage that goes beyond the intended purpose and/or any non-compliant use of the device can lead to dangerous situations.

Therefore:

- Only use the device compliant with its intended purpose.
- Observe all specifications of these instruction handbook.
- Ensure that only qualified personnel work with/on this device.
- When configuring, ensure that the device is always operated within its specifications.
- Mount the device on a wall that can sufficiently bear the load.
- The device must always be operated within a control cabinet.
- Ensure that the power supply complies with the stipulated specifications.
- The device may only be operated in a technically flawless condition.
- Only operate the device in combination with components approved by Baumüller Nürnberg GmbH.
- The device has been developed in such a manner that it fulfills the requirements of the category C2 according to EN 61800-3:2012.
- The device is not intended to be connected to the public mains. To operate the device in primary surroundings of the category C1 (residential, business and commercial areas, directly on a public low-voltage mains without an intermediate transformer), special measures to reduce the transient emissions (line-internal and radiated) must be provided for and certifiable by the system builder. Otherwise, EMC interference could occur without such additional measures.

2.4 Responsibility of the operating company

The device is used in commercial areas. Thus, the proprietor of the device is subject to the legal work safety regulations.

Along with the notes on work safety in these instruction handbook, the safety, accident prevention and environmental protection regulations valid for the area of application of this device must be complied with. Whereby:

- The operating company must inform himself about the applicable work health and safety regulations and ascertain, in a hazard assessment, any additional hazards that could arise from the special working conditions in the use area of the device. These must then be implemented in the form of instruction handbook for operation of the device.
- These instruction handbook must be kept accessible to personnel working with the device at all times in the immediate vicinity of the device.
- The specifications of the instruction handbook must be adhered to completely and without exception.
- The device may only be operated in a technically faultless and operationally safe condition.

2.5 Protective devices

Protection classification	
BM5-CAP-2S54	IP 20 [1)]

[1)] When the mating connector of X101 is plugged, otherwise IP 00.

DANGER!

Risk of fatal injury from electrical current!

There is an immediate risk of fatal injury if live electrical parts are contacted.

Therefore:

- The device must be in operated inside of a control cabinet that provides protection against direct contact of the devices and at least meets the requirements of EN 61800-5-1, Chapter 4.2.3.3.

2.6 Training of the personnel

WARNING!

Risk of injury due to insufficient qualifications!

Improper handling can lead to significant personal injury and material damage.

Therefore:

- Certain activities can only be performed by the persons stated in the respective chapters of these instruction handbook.

In these instruction handbook, the following qualifications are stipulated for various areas of activity:

- **Operating personnel**
  - The drive system may only be operated by persons who have been specially trained, familiarized and authorized.
  - Troubleshooting, maintenance, cleaning, maintenance and replacement may only be performed by trained or familiarized personnel. These persons must be familiar with the instruction handbook and act accordingly.
  - Initial operation and familiarization may only be performed by qualified personnel.

- **Qualified personnel**
  - Electrical engineers authorized by Baumüller Nürnberg GmbH, and qualified electricians of the customer or a third party who have learned to install and maintain Baumüller drive systems and are authorized to ground and identify electrical power circuits and devices in accordance with the safety engineering standards of the company.
  - Qualified personnel have had occupational training or instruction in accordance with the respective locally applicable safety engineering standards for the upkeep and use of appropriate safety equipment.

2.7 Personal protective equipment

The wearing of personal protective equipment is required when working in order to minimize health and safety risks.

- The protective equipment necessary for each respective type of work shall always be worn during work.
- The personal safety signs present in each working area must be observed.

Protective work clothing

should be snug-fitting work clothes, with low tearing resistance, narrow sleeves and with no extending parts. It serves to primarily protect against...

No rings or chains should be worn.

Hard hat

to protect against falling down and flying around objects.

Safety shoes

to protect against heavy objects falling down.

Protective gloves

to protect hands against friction, abrasion, puncturing or more severe injuries, as well as contact with hot objects.

Wear for special work.

Protective eye wear

to protect the eyes against flying around objects and sprayed liquids.

2.8 Special hazards

In the following section, the remaining marginal risks will be stated that have been identified as a result of the hazard analysis.

Observe the safety notes listed here and the warning notes in the further chapters of this Instruction handbook to reduce health risks and dangerous situations.

Electrical current

DANGER!

Risk of fatal injury from electrical current!

There is an immediate risk of fatal injury if live electrical parts are contacted. Damage to the insulation or individual components can be life-threatening.

Therefore:

- Switch off the electrical power immediately in case of damage to the power supply insulation.
- Only allow work on the electrical system to be performed by qualified personnel.
- Switch off the current when any kind of work is being performed on the electrical system and ensure safety before switching on again.

Danger from residual energy

DANGER!

Risk of fatal injury from electrical current!

Stored electric charge.

Discharge time of the rack system = discharge time of the device with the longest DC link discharge time in the rack system.

Refer to ▹Electrical data◃ as from page 21.

Therefore:

- Do not touch electrically live parts before taking into account the discharge time of the capacitors.
- Pay attention to the corresponding notes on the device.
- If additional capacitors are connected to the DC link, the DC link discharge can take a much longer time. In this case, the necessary waiting period must itself be determined or a measurement made as to whether the equipment is de-energized. This discharge time must be posted, together with an IEC 60417-5036 (2002-10) warning symbol, on a clearly visible location of the control cabinet.

2.9 Fire fighting

DANGER!

Risk of fatal injury from electrical current!

There is a risk of electric shock if an electrically-conductive, fire-extinguishing agent is used.

Therefore:

- Use the following fire-extinguishing agent:

ABC powder / CO_2

2.10 Safety equipment

WARNING!

Risk of fatal injury due to non-functional safety equipment!

Safety equipment provides for the highest level of safety in a facility. Even if safety equipment makes work processes more awkward, under no circumstances may they be circumvented. Safety can only be ensured by intact safety equipment.

Therefore:

- Before starting to work, check whether the safety equipment in good working order and properly installed.

2.11 Conduct in case of danger or accidents

Preventive measures

- Always be prepared for accidents or fire!
- Keep first-aid equipment (e.g. first-aid kits, blankets, etc.) and fire extinguishers readily accessible.
- Familiarize personnel with accident alarm, first aid and rescue equipment.

And if something does happen: respond properly.

- Stop operation of the device immediately with an EMERGENCY Stop.
- Initiate first aid measures.
- Evacuate persons from the danger zone.
- Notify the responsible persons at the scene of operations.
- Alarm medical personnel and/or the fire department.
- Keep access routes clear for rescue vehicles.

2.12 Signs and labels

The following symbols and information signs are located in the working area. They refer to the immediate vicinity in which they are affixed.

WARNING!

Risk of injury due to illegible symbols!

Over the course of time, stickers and symbols on the device can become dirty or otherwise unrecognizable.

Therefore:

- Maintain all safety, warning and operating labels on the device in easily readable condition.

Electrical voltage

Only qualified personnel may work in work areas that identified with this.

Unauthorized persons may not touch working materials marked correspondingly.

DANGER!

Risk of fatal injury from electrical current!

Stored electric charge.

Discharge time of the rack system = discharge time of the device with the longest DC link discharge time in the rack system.

Refer to ▹Electrical data◃ as from page 21.

CAUTION!

Risk of injury due to hot surface!

When in operation, the top of the device can heat up to temperatures > 70 °C!

Therefore:

- Wear protective gloves

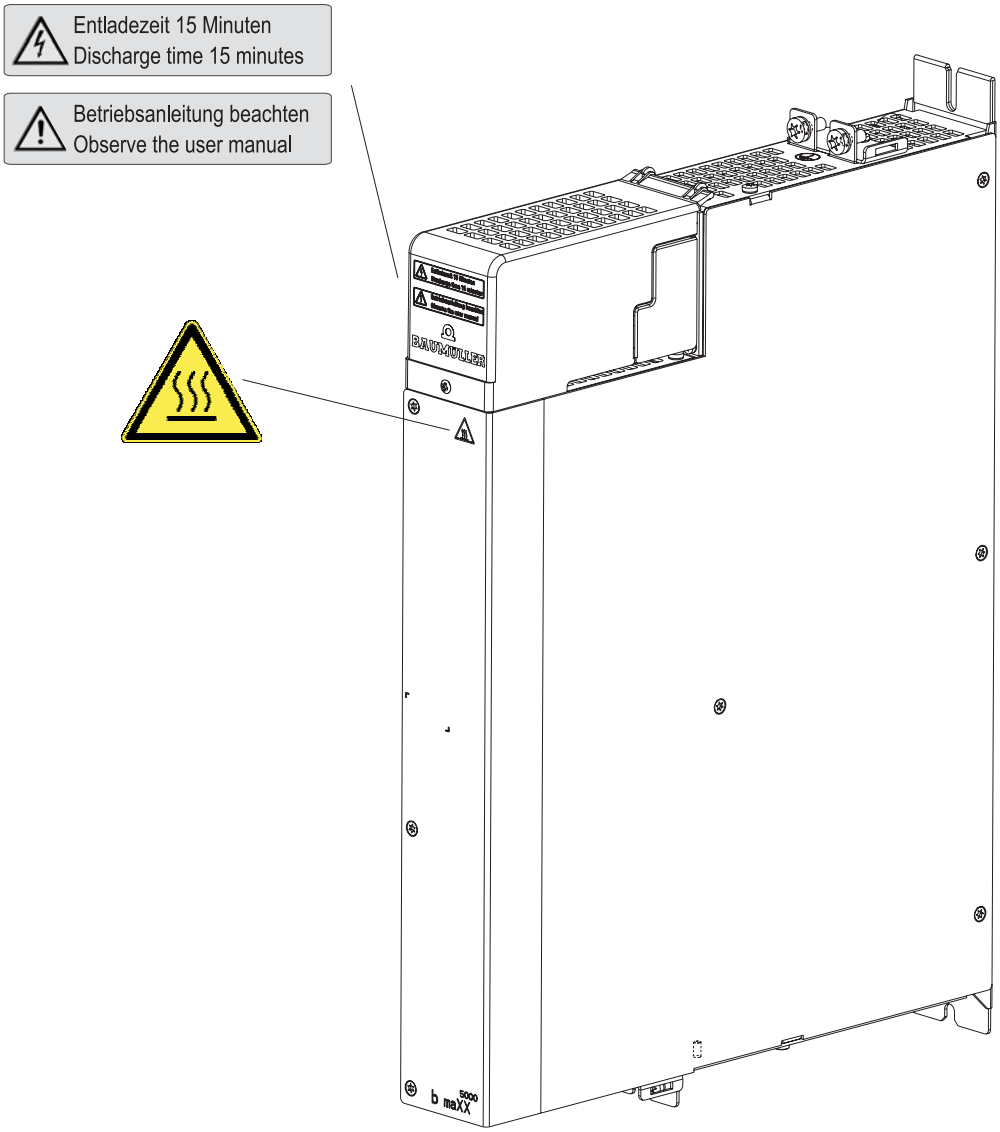

Figure 1: Signs and labels

3

TECHNICAL DATA

3.1 Dimensions

The following drawings show the main dimensions of the devices in millimeters [mm]. The space requirements in the control cabinet are also determined based on these drawings. To make the necessary drill holes/cutout sections, use the drawings in ▹Drilling pattern◃ as from page 34.

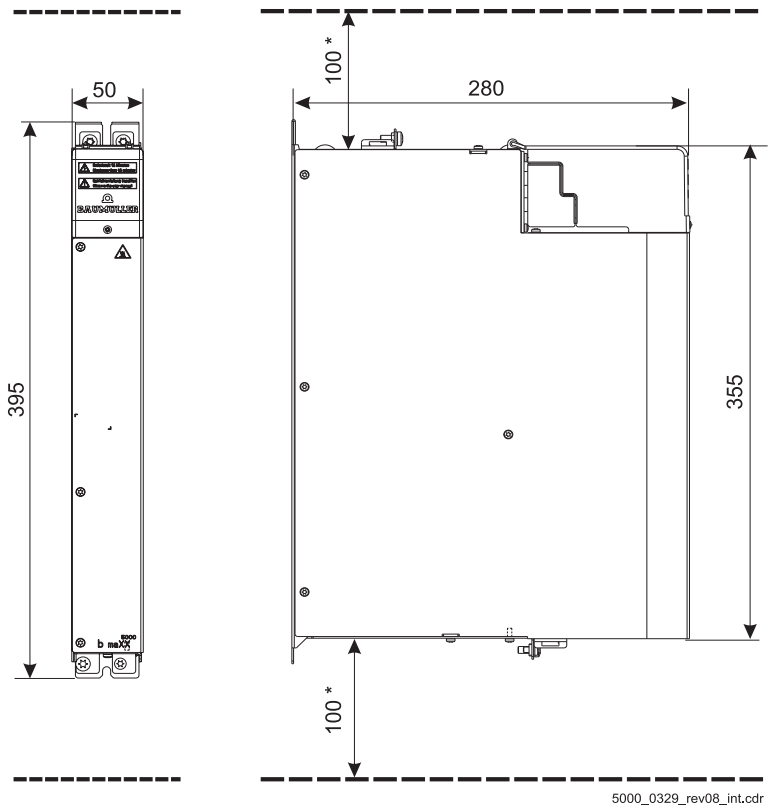

Figure 2: Dimensions BM5-CAP-2SXX *: Observe minimum clearance.

3.2 Weight

Device	Weight
BM5-CAP-2S54-03135	ca. 4.3 kg
BM5-CAP-2S54-04465	ca. 4.8 kg

3.3 Operating conditions

3.3.1 Required environmental conditions

Transport temperature range	- 25 °C to + 70 °C
Transport climate class (K) EN 60721-3-2	2 K 3
Storage temperature range	- 25 °C to + 55 °C
Storage climate class EN 60721-3-1	1 K 4
Operational temperature range	min. 5 °C to max. 55 °C (rated temperature 40 °C)
Operational climate class EN 60721-3-3	3 K 3
Operational altitude	Up to 5000 m above MSL
Humidity (operating) EN 60721-3-3	Relative humidity: 5% to 85% non-condensed, and absolute humidity: 1 g/m^3 to 25 g/m^3
Ionizing and non-ionized radiation	< measurable range
Vibration, shock and continuous shock EN 61800-5-1, chapter 5.2.6.4 vibration test	max. 0.5 g when operating
Degree of contamination EN 61800-5-1, table 6, tab. 2	2

[1] If used in areas according to the category C1 of IEC 61800-3: 2005, additional measures might be necessary. In this case the plant manufacturer / user has to provide evidence these additional measures take effect and the in IEC 61800-3 required thresholds of the category C1 are met.

NOTICE!

Normally only a non-conductive dirt buildup occurs. Any conductive dirt buildup, whether short-term or permanent, is prohibited and could lead to destruction of the device. The customer is responsible for destruction resulting from dirt buildup of conductive materials or matter.

3.3.2 Cooling

Cooling air temperature [1]	min. 5 °C to max. 55 °C (rated temperature: 40 °C)

[1] Air temperature in the entire intake area of the device.

3.4 Electrical data

	BM5-CAP-2S54-03135	BM5-CAP-2S54-04465
DC link capacitance	3135 µF	4465 µF
Tolerance	± 20 %	
Total permitted capacitance connected to the DC link	see electrical data of the corresponding mains rectifier unit	
DC link rated voltage (U_{DC})	540 V_{DC}	
DC link maximum voltage (U_{DC})	800 V_{DC}	
Load current limitation	no	
DC link discharge time (internal DC link capacitance)	t > 15 min	
Ripple current, 120 Hz, 105 °C	max. 29.5 A	max. 32.9 A

4

DESIGN AND OPERATION

4.1 Design

The external DC link capacitance units **BM5-CAP** are built in a housing of b maXX 5000 series.

NOTE!

Correct operation of DC link capacitance units **BM5-CAP** can only be ensured with Baumüller **mains rectifier units** or **basic units**

4.2 Identification of the device

4.2.1 Part number and type plate

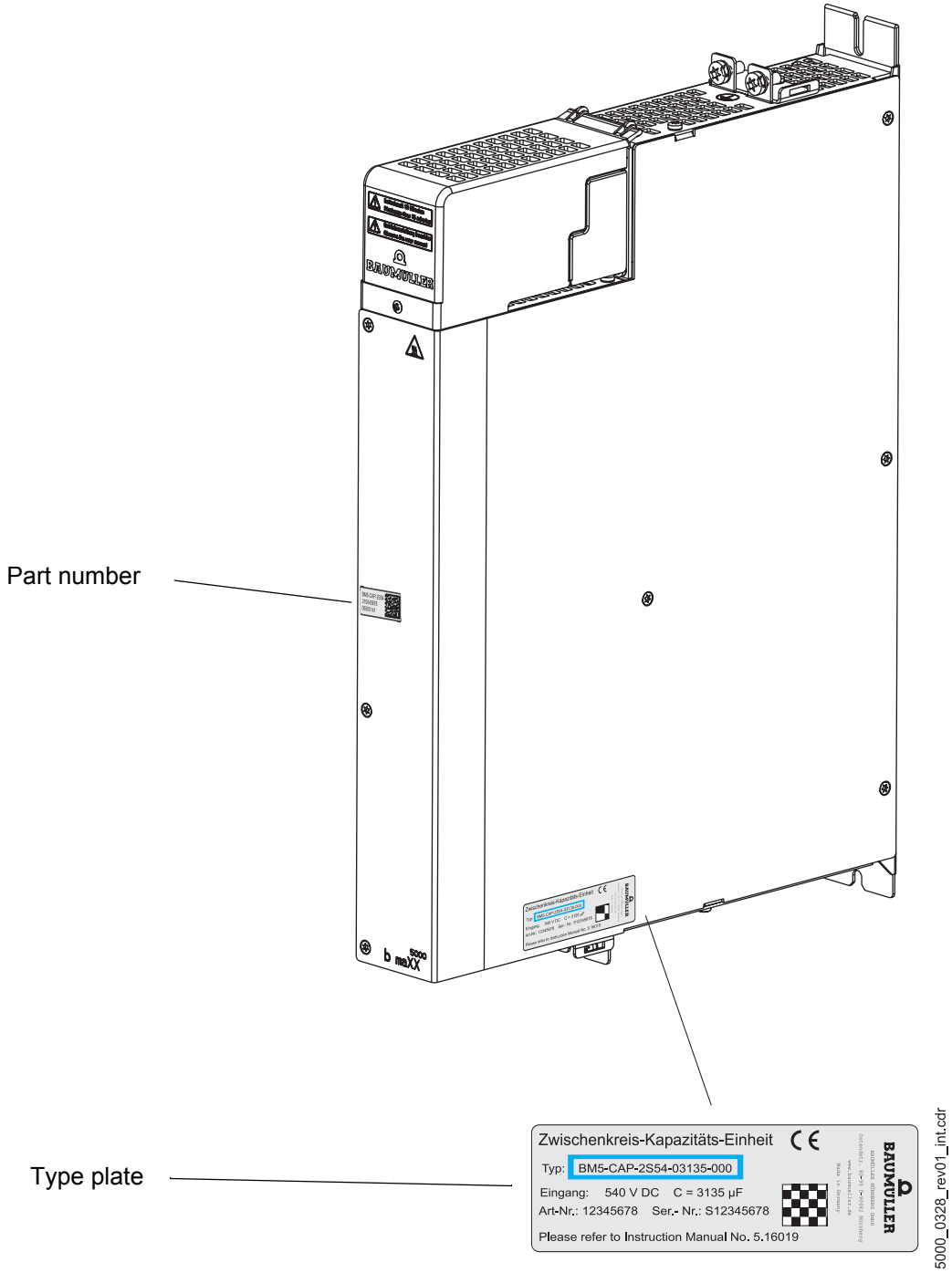

Figure 3: Location of part number and type plate

4.2.2 Type code

The type code has the format: BM5-CAP-XXXX-XXXXX-XXX.

The type code is explained in the following table.

BM5-CAP-XXXX-XXXXX-XXX	Device generation
BM5-CAP-XXXX-XXXXX-XXX	Module identifier CAP: DC link capacitance unit
BM5-CAP-XXXX-XXXXX-XXX	Housing size 2: 50 mm 3: 75 mm 4: 100 mm
BM5-CAP-XXXX-XXXXX-XXX	Type of cooling S: Air-cooled with air supply and with air outlet in the control cabinet A: Air-cooled with air supply and with air outlet outside the control cabinet Z: Water-cooled with water cooler in the control cabinet F: Water-cooled with water cooler outside the control cabinet C: Cold plate cooling via mounting wall of the control cabinet
BM5-CAP-XXXX-XXXXX-XXX	DC link rated voltage 31: 310 V DC 54: 540 V DC
BM5-CAP-XXXX-XXXXX-XXX	DC link capacitance Value in µF
BM5-CAP-XXXX-XXXXX-XXX	Special variants 000: Standard

4.3 UL notes

The notes below must be observed in case you consider UL 61800-5-1 and/or C22.2 No. 274.

- DC capacitor modules were evaluated for use in combination with BM5000 drive series.

- For use in NFPA79 industrial machinery applications

▹Requirements for the connection cables◃ on page 43

- Use 75°C wires only
- Use Copper Conductors Only

▹Required environmental conditions◃ on page 20

- Note the maximum surrounding air temperature.

Fuses

- Suitable for use on a circuit capable of delivering not more than 5000 rms symmetrical amperes, 480 volts maximum and when protected by fuses class J sized at maximum 125 % percent of the input current rating of the converter section and not larger than 350 A.
- Integral solid state short circuit protection does not provide branch circuit protection. Branch circuit protection must be provided in accordance with the Manufacturer Instructions, National Electrical Code, the Canadian Electrical code, part I", and any additional local codes.

Mechanical data using SI or English units - for dimensional drawing, mass information, packing, unpacking, moving, lifting, handling and mounting instructions including warnings of any hazards which can be experienced during installation refer to

- ▹Technical data◃ as from page 19
- ▹Transport and Packaging◃ as from page 29
- ▹Mounting◃ as from page 31
- ▹Installation◃ as from page 41

For marking for proper electrical connections refer to

- ▹Installation◃ as from page 41

For range of values of tightening torque in pound-inches to be applied to the clamping screws of field wiring refer to

- ▹Connection data◃ as from page 46

5

TRANSPORT AND PACKAGING

5.1 Safety notes for transport

NOTICE!

Damage due to unauthorized transport!

Transport handled by untrained personnel can lead to a substantial amount of material damage.

Therefore:

- The unloading of the packages upon delivery as well as the in-house transport should only be done by trained personnel.
- Contact Baumüller Nürnberg GmbH sales office if necessary.

WARNING!

Danger of physical impact!

Secure devices against falling down.

Therefore:

- Take suitable measures, such as supports, hoists, straps, etc., to ensure that device cannot fall down.
- Use appropriate means of transport.

5.2 What to observe when transporting

For initial transport of the device, it is packed at the manufacturer's plant. If the device is to be further transported, ensure that the following conditions are met throughout the entire transport:

- Climate class 2 K 3 as per EN 60721-3-2
- Temperature range - 25 °C up to + 70 °C
- Vibration, shock, continuous shock class 2 M 1 as per EN 60721-3-2

5.3 Transport inspection

Upon receiving the delivered goods, immediately examine them for completeness and transport damage.

If there is outwardly visible transport damage, proceed as follows:

- Do not accept the delivery or conditionally accept it with reservations.
- Note the extent of the damage on the transport documents or on the delivery note of the transport agent.
- Immediately file a complaint with the freight carrier. Have the complaint confirmed in writing and immediately contact the responsible representative of Baumüller Nürnberg GmbH.

NOTE!

The device may not be operated if there is visible transport damage!

5.4 Unpacking

After having received the still packaged device:

- Avoid transport shocks and hard jolts, e.g. when putting an item down.

If no transport damage is visible:

- Open the packaging of the device.
- Verify the delivery scope based on the delivery note.

File a claim with the responsible Baumüller representative if the delivery is incomplete.

NOTE!

Claim each individual deficiency as soon as it has been detected. Damage claims can only be validly asserted within the claim registration period.

5.5 Disposal of the packaging

The packaging consists of cardboard, plastic, metal parts, corrugated cardboard and/or wood.

- When disposing of the packaging, comply with the national regulations valid.

6

MOUNTING

The device is intended for mounting in a control cabinet.

Mounting comprises the following steps:

1 Mounting preparation
(for drilling holes/cutting out sections, see ▹Drilling pattern◃ as from page 34)

2 Mounting the device
(for fixing, see ▹Mounting instructions◃ on page 35)

6.1 Safety notes

NOTE!

Mounting shall only be performed by employees of the manufacturer or by other qualified personnel.

Qualified personnel are persons who – on account of their occupational training, experience, instruction and knowledge of relevant standards and stipulations, accident prevention regulations and operating conditions – are authorized by the persons responsible for the safety of the facilities to perform the respective activities that are necessary, while at the same time recognizing and preventing any potential risks. The qualifications necessary for working with the device are, for example:

- Occupational training or instruction in accordance with the standards of safety engineering for the care and use of appropriate safety equipment.

WARNING!

Danger as a result of faulty mounting!

The mounting requires qualified personnel with adequate experience. Faulty mounting can lead to life-threatening situations or substantial material damage.

Therefore:

- Only allow mounting to be performed by employees of the manufacturer or by other qualified personnel.

WARNING!

Danger of mechanical impact!

Secure devices against falling down.

Therefore:

- Take suitable measures, such as supports, hoists and assisting personnel, to ensure that device cannot fall down.
- Use appropriate means of transport.

CAUTION!

Danger due to sharp edges.

If the device is lifted with unprotected hands during mounting, palms or fingers can be cut. If the device falls, feet could be injured.

Therefore:

- Ensure that only qualified personnel, who are familiar with the safety notes and assembly instructions, mount this device.

Wear safety gloves.

Wear safety shoes.

6.2 Preparing for mounting

Based on the planning documents and the drilling patterns (see ▷Drilling pattern◁ as from page 34), the cutout sections and the positions of the attachment drill holes can be determined.

NOTICE!

Property damage due to conductive contamination.

Therefore:

- When performing installation work of any kind, it must be ensured that no foreign material (e.g. drill shavings, copper strands, etc.) gets into the device as a result.
- If possible, the drilling of the holes should be done before mounting the device and the configuring of the cables should take place outside of the control cabinet. If this is not possible, the device must be appropriately covered.
  Remove this covering again prior to start!

CAUTION!

Eye injury due to flung particles.

Metal particles are flung when making the drill holes and the cutout sections.

Therefore:

Wear protective eye wear!

➲ Preparing drill holes and cutout sections.

6.2.1 Drilling pattern

Use the drilling pattern to make the necessary drill holes/cutout sections.

NOTE!

Consider the minimum clearances for cooling when making the drill holes.

All dimensions in millimeters [mm].

Further notes see ▹Dimensions◃ as from page 19 and ▹Cooling◃ as from page 21.

How to determine the required space in the control cabinet, see ▹Dimensions◃ as from page 19.

Tolerance specifications

Drill hole dimensioning	±0.2 mm
Dimensioning openings	+1.0 mm
Relative tolerance of discretionary divisions	±0.1 mm

For air-cooled or water-cooled versions:

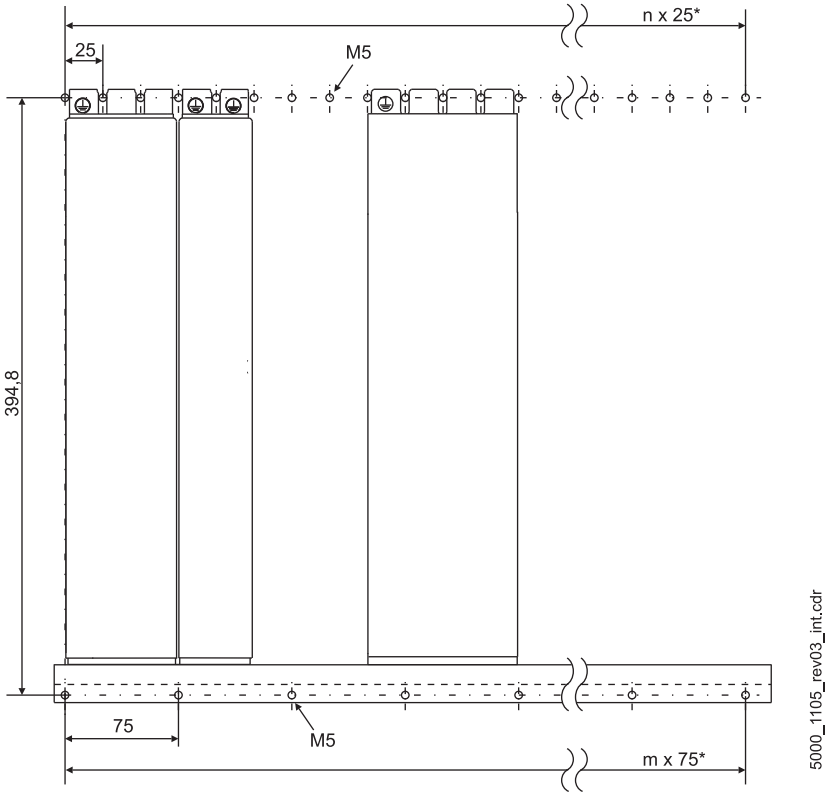

*: Relative tolerance of discretionary divisions: ±0.1 mm

Figure 4: Drilling pattern with mounting rail

For air-cooled, water-cooled and cold plate versions:

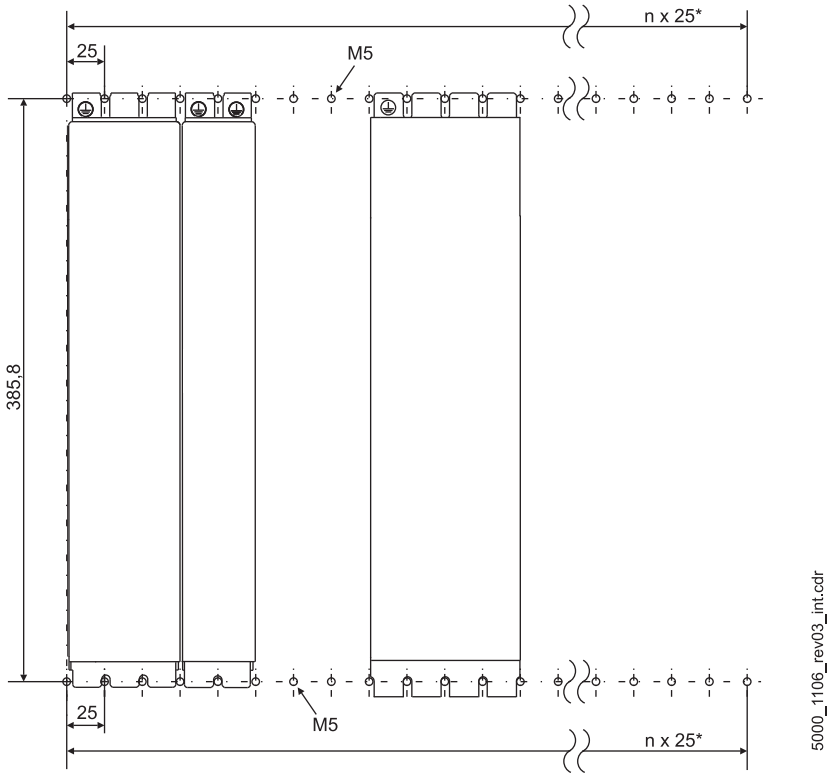

*: Relative tolerance of discretionary divisions: ±0.1 mm

Figure 5: Drilling pattern without mounting rail

6.3 Mounting instructions

There are different mounting techniques.

Each mounting technique is presented in a graphic (see ▹Figure 6◃ on page 36 and ▹Figure 7◃ on page 37).

The screws and washers required for mounting are listed beneath the respective graphic.

Carry out mounting as follows:

1 Provide suitable transport/lifting equipment as needed.

2 Keep suitable fastening components readily available.

3 Mount the device.

6.3.1 Mounting with mounting rail

After attaching the mounting rail, push the device from below beneath the upper fastening bolts (1). Then, tilt the device on the mounting plate (2) and slide onto the mounting rail (3). Finally, tighten the upper fastening and grounding bolts (4).

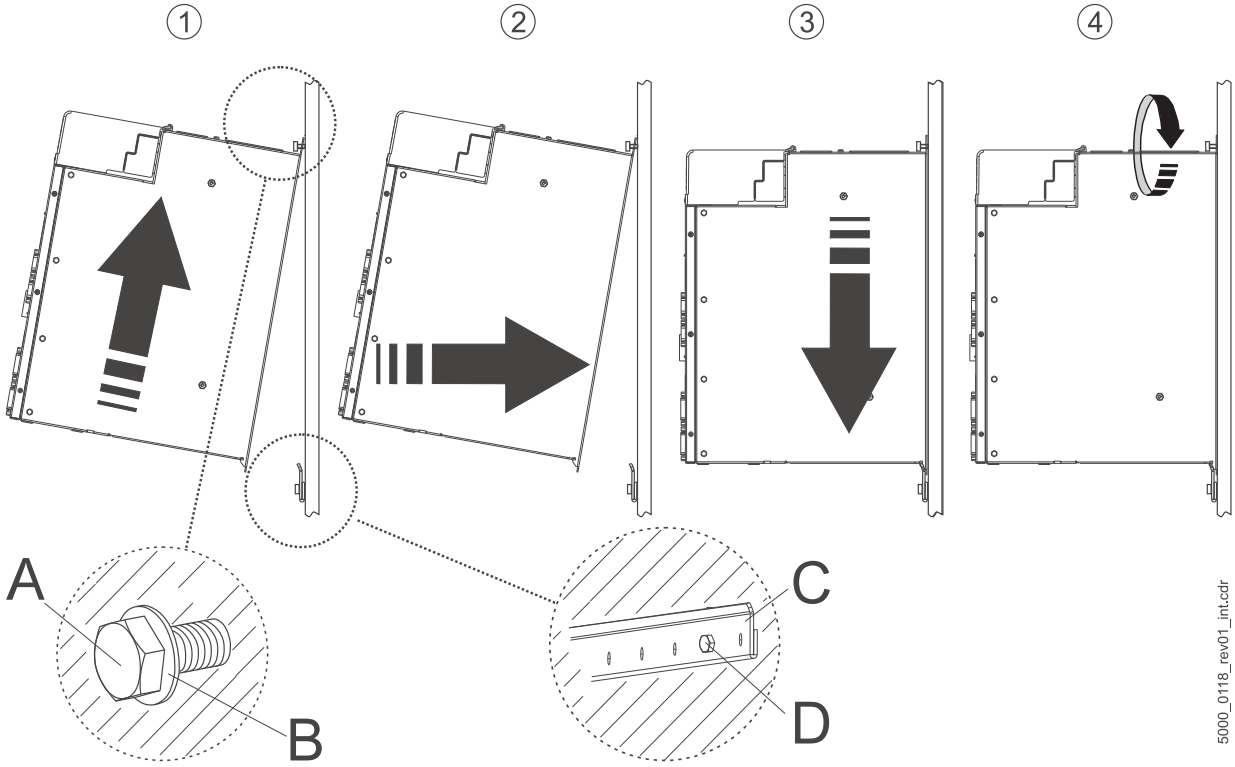

Figure 6: Mounting instructions with mounting rail

Device	**BM5-CAP-XXXX**
A - screws	2 x M5
B - washers	2 x (5,3 x 10)
C - screws	n x M5 [1)]
D - Mounting rail 1000 mm	See Accessories and Spare Parts ▹Mounting rail◃ as from page 49

[1)] Number n depends on the length of the mounting rail

6.3.2 Mounting without mounting rail

Push the device from below beneath the upper fastening bolts (1). Then, tilt the device on the mounting plate (2) and slide into the fastening bolts (3). Finally, tighten all fastening and grounding bolts (4).

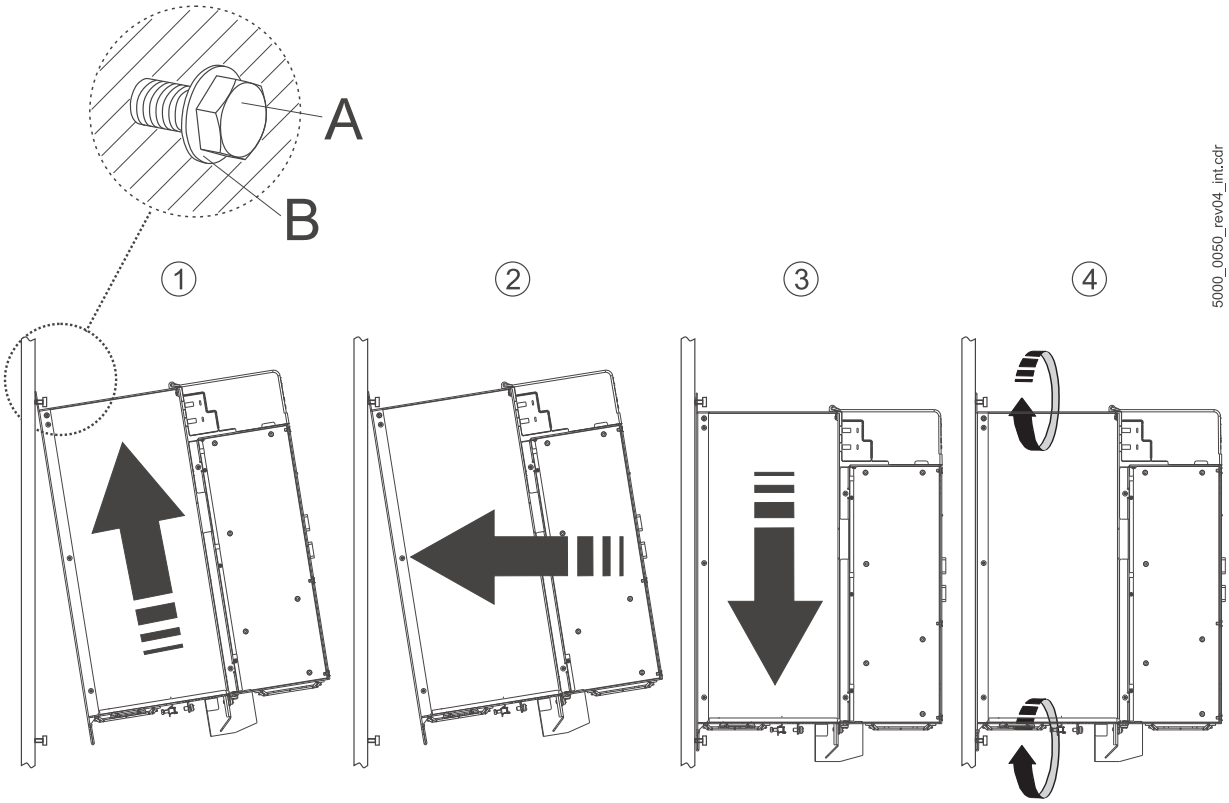

Figure 7: Mounting instructions without mounting rail

Device	BM5-CAP-X2XX	BM5-CAP-X3XX	BM5-CAP-X4XX
A - screw	2 x M5	4 x M5	4 x M5
B - washers	2 x (5,3 x 10)	4 x (5,3 x 10)	4 x (5,3 x 10)

6.3.3 Mounting of the DC link rail

Observe the following items when mounting the DC link rail:

- Position of the chamber-bevel (detail Y)on bottom
  Position of the screw thread (detail Z) on top.
  The correctly mounting of the distance bushings makes it easier to disassemble the unit in case of service and ensures the captivity of the distance bushings.
  Neck collar screw (1)
  DC link rail (2)
  Distance bushing (3)
  BM5-CAP DC link terminal (4)

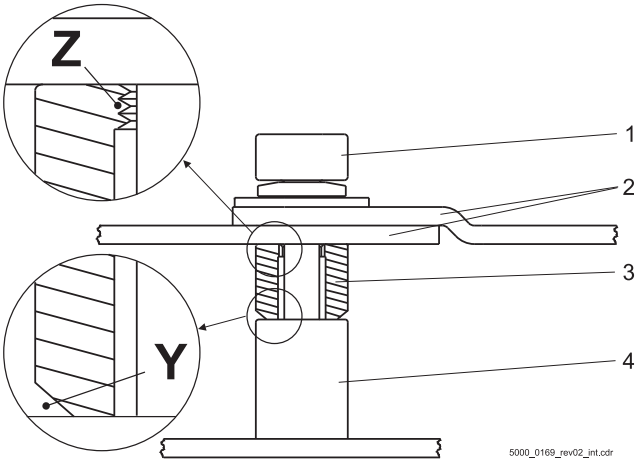

Figure 8: Correctly mounted DC link rail

- Distance bushing and neck collar screw
  It is recommended to assemble the neck collar screw and the distance bushing to the DC link rail before mounting the DC link rail. The correctly mounting of the distance bushings makes it easier to disassemble the unit in case of service and ensures the captivity of the distance bushings.

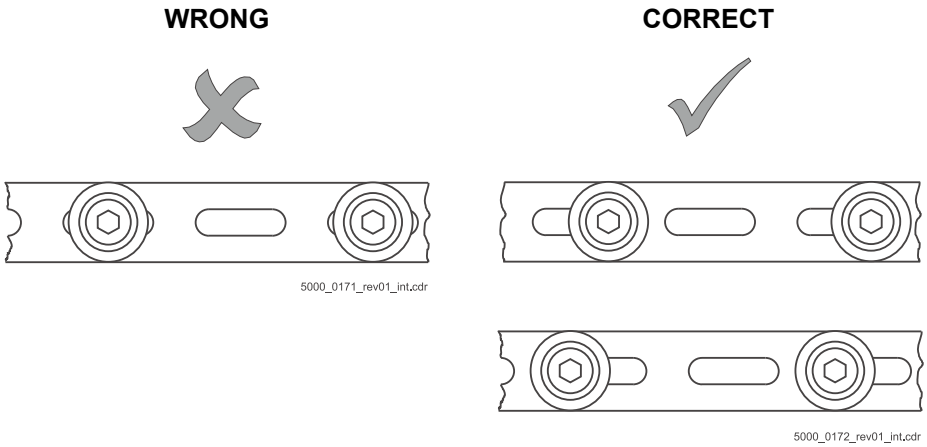

Figure 9: Mounting of the neck collar screw

- DC link rail
  Observe the correct mounting of the DC link rail. There should no mechanical stress affect to the drill hole.

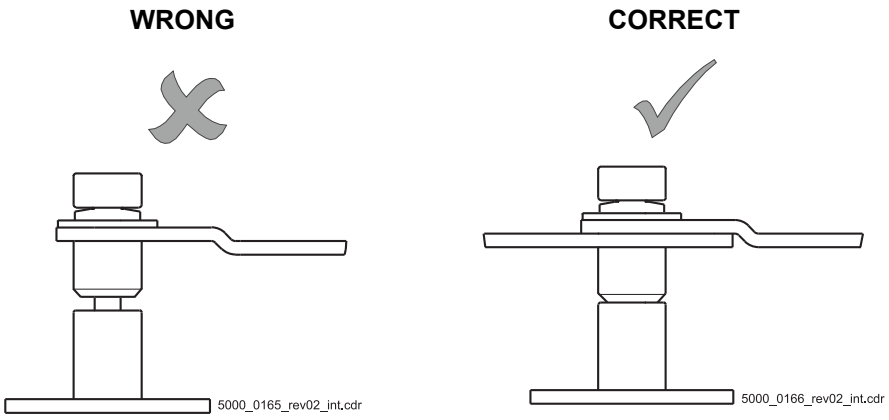

Figure 10: Mounting of the DC link rail

NOTE!

The DC link rail must not overlap the first or last fixing bolt of the rack system. Cut the DC link rail therefore.

6.3.4 Demounting

NOTE!

The yellow cover plate can be removed when mounting/demounting air-cooled devices and there is not enough space above the device (min. 15 cm) for lifting up the cover.

The yellow cover plate must be removed when replacing the cold plate devices, always.

7

INSTALLATION

This chapter describes the electrical installation of the device.

Prior to installation, ensure that the technical prerequisites have been fulfilled:

1 Check the demands on the DC link.

2 Check the requirements for the DC link connection and provide the cables, DC link rails or connectors

7.1 Safety notes

NOTE!

Installation shall only be performed by employees of the manufacturer or by other qualified personnel.

Qualified personnel are persons who – on account of their occupational training, experience, instruction and knowledge of relevant standards and stipulations, accident prevention regulations and operating conditions – are authorized by the persons responsible for the safety of the facilities to perform the respective activities that are necessary, while at the same time recognizing and preventing any potential risks. The qualifications necessary for working with the device are, for example:

- Occupational training or instruction, and the authorization to commission, ground and mark electrical power circuits and devices in accordance with the standards of the safety engineering.
- Occupational training or instruction, in accordance with the standards of work safety, for the care and use of appropriate safety equipment.

WARNING!

Danger due to faulty installation and initial commissioning!

Installation and initial commissioning require qualified personnel with adequate experience. Faulty installation can lead to life-threatening situations or substantial material damage.

Therefore:

- Only allow installation and initial commissioning to be performed by employees of the manufacturer or by other qualified personnel.

DANGER!

Risk of fatal injury from electrical current!

Inevitably, when operating this electrical device, certain parts of it are energized with hazardous voltage.

Therefore:

- Pay heed to areas on the device that could be dangerous during the electrical installation.
- Pay heed to areas on the device that could still be electrically energized after operation.

Danger from residual energy

DANGER!

Risk of fatal injury from electrical current!

Stored electric charge.

Discharge time of the modular system = discharge time of the device with the longest DC link discharge time in the modular system.

Refer to ▹Electrical data◃ as from page 21.

Therefore:

- Do not touch before taking into account the discharge time of the capacitors and electrically live parts.
- Heed corresponding notes on the equipment.
- If additional capacitors are connected to the DC link, the DC link discharge can take a much longer time. In this case, the necessary waiting period must itself be determined or a measurement made as to whether the equipment is de-energized. This discharge time must be posted, together with an IEC 60417-5036 warning symbol, on a clearly visible location of the control cabinet.

7.2 Voltage test

DANGER!

Risk of fatal injury from electrical current!

During the routine test of these devices, a voltage test is performed by Baumüller Nürnberg GmbH in accordance with EN 61800-5-1, Section 5.2.3.2. It is thus unnecessary for the customer to do this.

Therefore:

- Subsequent tests of the devices using high voltages may only be performed by Baumüller Nürnberg GmbH.
- Disconnect the device from the system during high-voltage testing!

7.3 Demands on the DC link

For all important data, see ▹Electrical data◃ as from page 21.

The destruction of the device can cause personal injury.

DANGER!

Risk of fatal injury from electrical current!

If the requirements for the DC link are not complied, the device can be damaged or destroyed, thereby greatly endangering individuals.

NOTICE!

The removed wire bridge must not fall into the device.

7.4 Requirements for the connection cables

- Take into account IEC/EN 60204-1, chapter 13 when selecting the cable.
- The protective ground cross section of the cable must be compliant with IEC/EN 60204-1, Section 5.2, Tab. 1.
- A fixed connection for the protective ground conductor is mandatorily specified for operation of the device.
- Use copper cable approved for a minimum of 60 °C (drives < 3 x 100 A) or 75 °C (drives ≥ 3 x 100 A), if comply with UL 508C.

For further details (e.g. maximum allowable length), see ▹DC link rail◃ as from page 49.

7.5 PE connection and RCD compatibility

Depending on the functional principle, leakage current >3.5 mA_{AC} or >10 mA_{DC} can flow through the protective ground conductor. Consequently, a stationary ground conductor connection in accordance with EN 61800-5-1 is required.

DANGER!

Risk of fatal injury from electrical current!

This product can cause direct and/or alternating current in the protective ground conductor.

The leakage current, due to the functional principle of the device, can lead to premature triggering of the fault current protective device or generally prevent triggering of it.

Therefore:

- Wherever a differential current device (RCD) is used for protection in case of direct or indirect contact, only an RCD of the type B is permitted on the power supply side of the device.
- Otherwise a different protective measure must be utilized, such as separation from the surrounding by means of double or enhanced isolation, or separation from the power supply system by means of an isolating transformer, for example.

7.6 Installation procedure

DANGER!

Risk of fatal injury from electrical current!

Electrically live parts are life-threatening.

Therefore:

- Make certain that the parts to be mounted (e.g. mains cables) and the mounting areas are de-energized for the entire duration of mounting the device.

- Route all cables in an EMC-compatible manner.
- Connect DC link (see ▹Electrical connections◃ as from page 45). (Observe the permissible torques!)
- For all connections, attentions is to be paid to strain relief

The installation comprises the following steps:

1. Connect the DC link via connector X101 or via DC link rail (refer to ▹Mounting of the DC link rail◃ on page 38).
2. Connect the protective ground conductor to the PE terminal (a fixed ground conductor connection is absolutely mandatory).

7.7 Electrical connections

NOTE!

The identifiers 1C1 and 1D1 were taken over from DIN EN 60445. 1C1 is the connection to the positive DC link cable/rail, and in the past was identified by Baumüller in some devices as ZK+. 1D1 is the connection to the negative DC link cable/rail, and in the past was identified by Baumüller in some devices as ZK+.

7.7.1 Electrical connection via DC link rail on device front

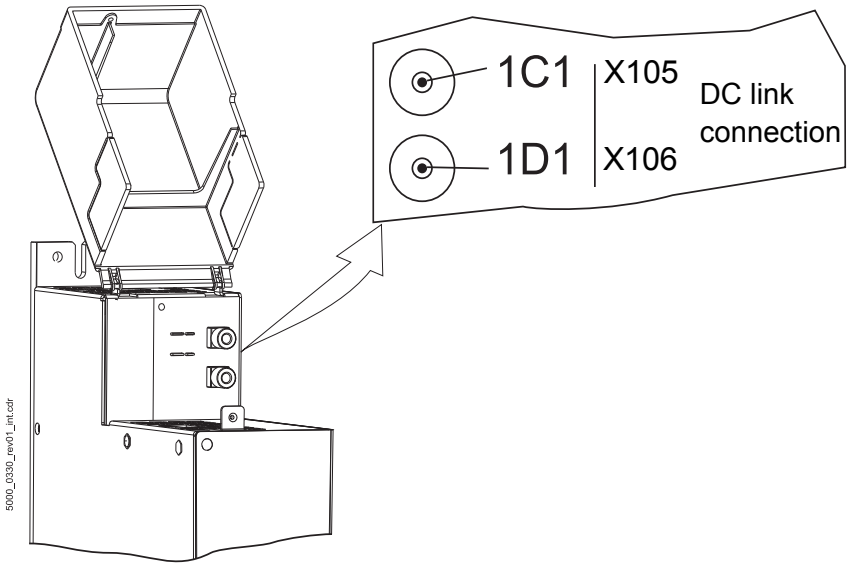

Figure 11: DC link connection via DC link rail

7.7.2 Electrical connection via connector X101 device bottom side

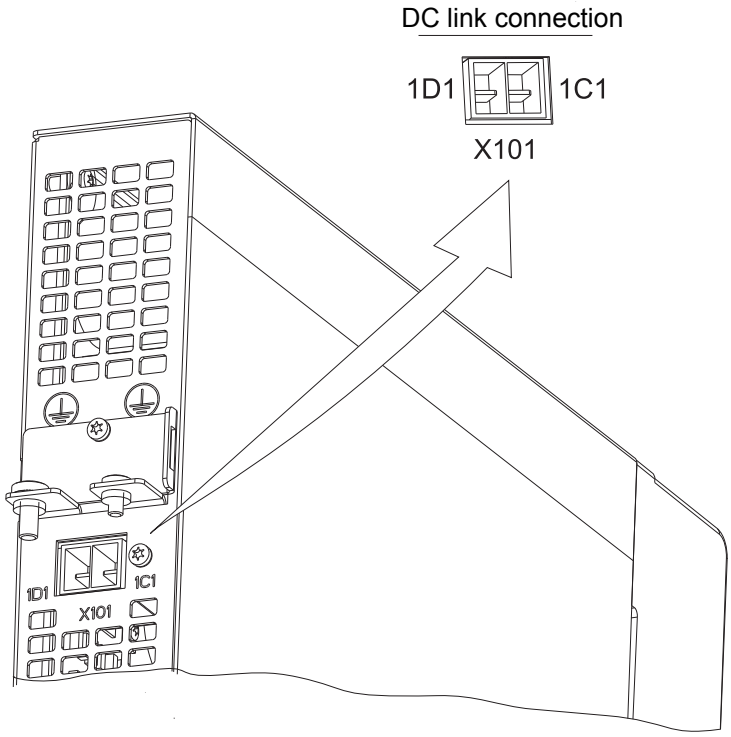

Figure 12: DC link connection via connector X101

7.7.3 Connection data

NOTE!

To ensure sufficient current load capacity of the connections, adhere to the specified torques!

PE device	min. 10 mm²	Cable lug for M5	Min. 2.2 Nm / 19.5 lbf in Max. 3.0 Nm/ 26.6 lbf in	-

DC link 1C1 and 1D1	DC link bar	Min. 2.2 Nm / 19.5 lbf in Max. 3.0 Nm/ 26.6 lbf in	Max. load of the bar: 130 A

DC link 1C1 and 1D1	Connector X101	AWG 8 ... 24 Cable diameter: max. 6 mm² Stripping length: 15 mm	Max. load: 41 A

8

MAINTENANCE

Basic information

	**WARNING!** **Risk of injury due to improperly performed maintenance work!** Improper maintenance can lead to severe personal injury and material damage. Therefore: • Before beginning work, make sure that there is enough space for mounting. • Make sure that the mounting area is kept clean and orderly. Parts and tools that are loosely stacked or lying around are a potential accident source.

	**DANGER!** **Risk of fatal injury from electrical current!** Inevitably, when operating this electrical device, certain parts of it are energized with hazardous voltage. Therefore: Pay heed to areas on the device that could be dangerous during the maintenance. Pay heed to areas that could still be electrically energized after operation.

8.1 Environmental condition

If the prescribed environmental conditions are adhered to, then the device is maintenance-free. For the prescribed environmental conditions, see ▹Required environmental conditions◃ on page 20.

8.2 Inspection intervals - maintenance notes

Preventive maintenance is prescribed to keep the device in an optimum operating condition and ensure a long service life. It is recommended to have inspections performed regularly by qualified personnel.

Basic check points as to whether discrepancies have occurred during operation:

- Is the operating environment normal?
- Is the cooling system working normally?

Before checking, switch off the input voltage and wait until the device's capacitors have discharged.

DANGER!

Risk of fatal injury from electrical current!

Therefore:

- Switch off voltage before performing work!
- Only qualified personnel may mount, install and maintain the devices.
- Please remove all metallic objects worn, such as watches or rings, for example, before beginning to work on the device.
- Only insulated tools are permitted.

DANGER!

Risk of fatal injury from electrical current!

Stored electric charge.

Discharge time of the rack system = discharge time of the device with the longest DC link discharge time in the rack system.

Refer to ▹Electrical data◃ as from page 21.

Therefore:

- Do not touch before taking into account the discharge time of the capacitors and electrically live parts.
- Heed corresponding notes on the equipment.

8.3 Repairs

In case of device damage, please inform your sales office or:

Baumüller Nürnberg GmbH
Ostendstr. 80 - 90
90482 Nürnberg
Deutschland

Tel. +49 9 11 54 32 - 0

E-Mail: mail@baumueller.de
Internet: www.baumueller.de

9

ACCESSORIES AND SPARE PARTS

Accessories/spare parts for devices of the **b maXX** series are listed in this appendix. Product management is happy to handle any queries and suggestions on accessory parts.

9.1 Rails

9.1.1 DC link rail

Length	Part No.
1 m	424188

Accessories	Part No.
DC link spacer bushing	424129
Screw	420020

9.1.2 Mounting rail

Length	Part No.
1 m	424187

9.2 DC link connector X101

	Part No.
Connector	425794

10

SHUTDOWN, STORAGE

In this chapter we describe, how you decommission and store the device.

10.1 Safety instructions

- Refer to ▹Safety◃ as from page 9 and the information in ▹Transport and Packaging◃ as from page 29.

The shutdown of the device may only be carried out by for this qualified personnel.

DANGER!

Risk of fatal injury from electrical current!

Stored electric charge.

Discharge time of the system = discharge time of the device with the longest DC link discharge time.

Therefore:

- Do not touch electrically live parts before taking into account the discharge time of the capacitors.
- Assure, that all electric connections are current-free and are safe against switch-on.
- Before working, check at the electrical connections with suitable measuring devices, that the connections are off-circuit.
- Remove the connections not until the safe isolation from supply has been checked.
- If additional capacitors are connected to the DC link, the DC link discharge can take a much longer time. In this case, the necessary waiting period must itself be determined or a measurement made as to whether the equipment is de-energized. This discharge time must be posted, together with an IEC 60417-5036 (2002-10) warning symbol, on a clearly visible location of the control cabinet.

10.2 Requirements to the executing personnel

The personnel, who is appointed to setting out of operation, must have the required knowledge and instructions, which is necessary for an execution according to the rules. Select the personnel in such a way, that the safety instructions, which are mounted to the device and its parts as well as to the connections, are understood and applied to.

10.3 Shutdown

Execute the setting out of operation as follows:

1 put the device off-circuit and assure the device against unintentional restart.

2 check the isolation from supply of all connections (earliest 10 minutes after switching off).

3 demount the connections and protect the connections according to the safety instructions.

4 document the shut down setting.

10.4 Demounting

The demounting assumes a completed, documented setting out of operation.

NOTICE!

Note sharp edges.

In case, while installing, you lift a device with unprotected hands, fingers/palm can be cut. If the device falls off, your feet can be cut up.

Therefore:

- Ensure that only qualified personnel, who are familiar with the safety notes and assembly instructions, demount this device.

Wear safety gloves.

- Wear safety shoes.

1 secure the device against falling off/out.

2 loosen all mechanical connections.

3 lift the device out of the control cabinet.

4 store the device in a suitable packing.

5 at transportation pay attention to, that the device is not damaged by wrong storage or severe shocks, also see ▹What to observe when transporting◃ on page 29.

In case you want to dispose the device, additional data is available in chapter ▹Disposal◃ as from page 55.

10.5 Storage conditions

The device is maintenance-free. If you keep to the environmental conditions during the entire period of storage, you can assume, that the device will not be damaged. In case the environmental conditions during storage are not kept, you should assume that the device is damaged after storage.

CAUTION!

Property damage because of incorrect storage conditions

Incorrect storage can damage/destroy the device.

Therefore:

Assure, that the environmental conditions are kept during the entire period of storage:

- Climatic category 1K4
- Temperature range -25 °C to +55 °C

CAUTION!

Recommissioning without forming of the capacitors.

From six months storage period on, the capacitors are destroyed during commissioning, if they are not formed beforehand

- Reform the DC link capacitors:
  - by supplying the device ready-to-operate for at least one hour with supply voltage
  - but do not transmit a pulse enable during this time.
- Consider, that it is imperative, to connect the accordingly prescribed line commutating reactor for this forming procedure. Devices, where no line commutating reactor is necessary can directly be supplied with mains voltage.

10.6 Recommissioning

Execute commissioning as with a new device, see
▹Mounting◃ as from page 31, ▹Installation◃ as from page 41.

CAUTION!

Recommissioning without forming of the capacitors.

From six months storage period on, the capacitors are destroyed during commissioning, if they are not formed beforehand

- Reform the DC link capacitors:
  - by supplying the device ready-to-operate for at least one hour with supply voltage
  - but do not transmit a pulse enable during this time.
- Consider, that it is imperative, to connect the accordingly prescribed line commutating reactor for this forming procedure.Devices, where no line commutating reactor is necessary can directly be supplied with mains voltage.

11

DISPOSAL

NOTE!

Baumüller products are not subject to the scope of application of the EU's Waste Electrical and Electronic Equipment Directive (WEEE, 2012/19/EU). Hence, Baumüller is not obligated to bear any costs for taking back and disposing of old devices.

11.1 Safety regulations

DANGER!

Risk of fatal injury from electrical current!

Stored electric charge.

Discharge time of the system = discharge time of the device with the longest DC link discharge time in the modular system.

Refer to ▹Electrical Data◃.

Therefore:

- Do not touch before taking into account the discharge time of the capacitors and electrically live parts.
- Heed corresponding notes on the equipment.
- If additional capacitors are connected to the intermediate circuit, the intermediate circuit discharge can take a much longer time. In this case, the necessary waiting period must itself be determined or a measurement made as to whether the equipment is de-energized. This discharge time must be posted, together with an IEC 60417-5036 (2002-10) warning symbol, on a clearly visible location of the control cabinet.

CAUTION!

Danger due to sharp edges.

If the device is lifted with unprotected hands during deinstallation, palms or fingers can be cut. If the device falls, feet could be injured.

Therefore:

- Ensure that only qualified personnel, who are familiar with the safety notes and assembly instructions, mount this device.

Wear safety gloves.

Wear safety shoes.

WARNING!

Danger of physical impact!

Secure device against falling down.

Therefore:

- Take suitable measures, such as supports, hoists and assisting personnel, to ensure that device cannot fall down.
- Use appropriate means of transport.

NOTICE!

Avoid polluting the environment as a result of improper disposal.

Therefore:

- Only dispose in compliance with the health and safety regulations.
- Take heed of any special local regulations. If you are unable to directly ensure safe disposal yourself, commission a suitable disposal contractor.
- In the event of a fire, hazardous substances could possibly be generated or released.
- Do not expose electronic components to high temperatures.
- Beryllium oxide is used as inner insulation, for example for various power semiconductors. The beryllium dust that is generated upon opening is injurious to the health.
  Do not open electronic components.
- Dispose of capacitors, semiconductor modules and electronic scrap as special waste.

WARNING!

Danger as a result of faulty deinstallation!

The deinstallation and disposal requires qualified personnel with adequate experience.

Therefore:

- Only allow deinstallation and disposal to be performed by qualified personnel.

11.2 Disposal facilities/authorities

Ensure that the disposal is handled in compliance with the disposal policies of your company, as well as with all national regulations of the responsible disposal facilities and authorities. In case of doubt, consult the bureau of commerce or environmental protection authority responsible for your company.

A

APPENDIX A - DECLARATION OF CONFORMITY

EU - Declaration of Conformity

Doc.-No.: 5.16021.01
Date: 08-Mar-2022

according to EMC Directive 2014/30/EU and Low Voltage Directive 2014/35/EU

The Manufacturer: Baumüller Nürnberg GmbH
Ostendstraße 80-90
90482 Nuremberg, Germany

declares, that the products

Brand: Baumüller

Type: DC link capacitance unit
BM5-CAP-2S54-03135
BM5-CAP-2S54-04465

Manufactured since 3-Apr-2017

are developed, designed and manufactured in accordance with the EMC Directive 2014/30/EU and the Low Voltage Directive 2014/35/EU.

Applied harmonized standards:

Standard	Title
DIN EN 61800-5-1:2017-11	Variable-speed electrical power drive Part 5-1: Safety requirements - Electrical, thermal and energy
DIN EN 61800-3:2019-04	Variable-speed electrical power drive Part 3: EMC requirements and specific test methods

Attention should be paid to the safety instructions in the instruction handbook.

Nuremberg / 8-Mar-2022
City / Date

Subject to change of this declaration of EC conformity without notice. Actual valid edition on request.

Table of Figures

Table of Figures

Index

Overview of Revisions

Version	Status	Changes
5.16019.01	28-Apr-2017	Creation
5.16019.02	07-Mar-2022	New device BM5-CAP-2S54-04465, update declaration of conformity, UL-notes added
5.16019.03	23.May-2022	Update

Notes:

be in motion

Baumüller Nürnberg GmbH Ostendstraße 80-90 90482 Nürnberg T: +49(0)911-5432-0 F: +49(0)911-5432-130 **www.baumueller.de**